centroitalia Yachting®
A STORY BORN FROM WATER

AGENDA

01. About us
02. Certificates
03. Awards & Publications
04. Organizational chart
05. Clients
06. Services
07. Custom Pool
08. Hot Tubs
09. Hot Tub customization
10. Sauna, Hammam and Gym
11. Plans
12. Working method
13. Applied technologies
14. Remote control Software
15. Water cycle (Pool with balance tank)
16. Water cycle (One pool with tank)
17. Water cycle (Two pools with tank)
18. Water cycle (Two pools, fresh | salt water with tank)
19. Filtration system
20. Hydromassage & Waterfall systems
21. Heating system
22. Lighting system
23. Hydraulic lift system
24. Portfolio: Dragon 80
25. Portfolio: Elements 80
26. Portfolio: ISA 45 GT
27. Portfolio: Resilience 65
28. Portfolio: Panam 40

01. About us

centroitalia Yachting®

Centro Italia Yachting® is a division of the well-established Centro Italia, founded in Rome in 1987. The company specializes in luxury **swimming pools and wellness systems for yachts, mega yachts, and cruise ships.**

Known for blending advanced technology with exquisite design, we offer **high-quality, custom solutions tailored to each client's needs**.

Our multidisciplinary team, including **architects, engineers, and designers**, manages projects from initial concept to final inspection. Beyond swimming pools, our offers extend to **gyms, saunas, spas, whirlpools, and luxury furnishings**, often in collaboration with prestigious Italian brands. Renowned for meticulous **craftsmanship and innovative materials**, Centro Italia Yachting® sets a new standard in luxury boating, combining aesthetic elegance with functional excellence.

02. Certificates

centroitalia Yachting

ISO 9001:2015

International standards for quality management, demonstrating consistent ability to provide products and services that satisfy customer and regulatory requirements.

ISO 45001:2018

International standard for occupational health and safety management systems that helps organizations ensure safe workplaces by preventing work-related injuries and illnesses, emphasizing risk management, leadership, and worker participation.

ISO 14001:2015

International standard for environmental management systems that helps organizations improve their environmental performance, comply with regulations, and achieve sustainability goals through systematic management of environmental aspects.

CERTIFIED PDR 125:2022 CERTIFIED

Promote the implementation of corporate policies that support gender equality and women's empowerment, facilitating women's access to the labor market, leadership roles, and a better work-life balance.

03. Awards & Publications

centroitalia Yachting

Awards

Cited by Businesscoot as a leading Italian niche swimming pool construction company

Published by

- Superyacht
- Valore Italia
- Piscine Oggi
- Boat International

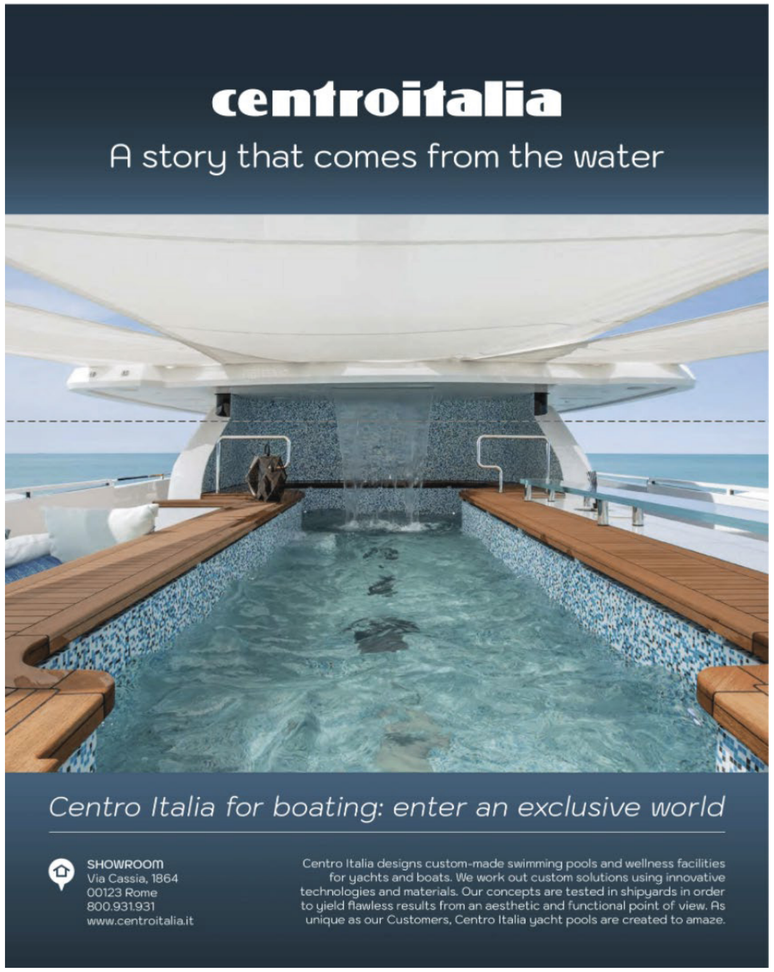

04. Organizational chart

centroitalia Yachting

- Operation Department
- Sales office
- Production office
- Design

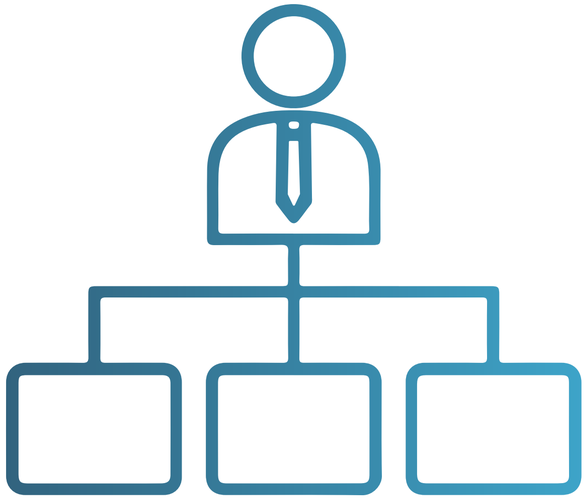

- Sole Director

- Administrative department
- Research & development
- HR
- General administration

05. Clients

centroitalia Yachting

BAGLIETTO NAVY 1854

CCN

ISA YACHTS

OVERMARINE GROUP

FERRETTIGROUP
PASSION. INNOVATION. EXCELLENCE.

PALUMBO SUPERYACHTS

CRN

ADMIRAL

THE ITALIAN SEA GROUP

YACHTLEY
EXLUSIVE YACHTS

WIDER

NCA REFIT

AMICO &CO

Columbus YACHTS

ADHARIA
LUXURY FLOATING SUITES & APARTMENTS

TANKOA
ITALIAN YACHTS

MONACO MARINE
yachtcarenetwork

06. Services

centroitalia Yachting

Main products

- Custom pool
- Hot Tubs
- Sauna & Hammam
- Outdoor design & Gym

Technologies

- Fresh/salt water systems
- Filtration, waterfall and heating system
- Lighting systems
- Remote-controlled automation devices
- Hydraulic lift system
- Flooring

07. Custom Pool

centroitalia Yachting

Custom pool tubs are available in the following materials:

- **Marine Grade AISI 316 Steel**
- **Marine Aluminum**
- **Fiberglass**

These tubs are designed and built in our warehouse, and the filtration and whirlpool systems are assembled in our facilities.

08. Hot Tubs

centroitalia Yachting

Jacuzzi hot tubs are supplied and installed by us, with all necessary modifications to suit the specific requirements of the vessel.

Centro Italia Yachting is a Jacuzzi partner, **specialized in adapting and customizing Jacuzzi pools for maritime use, ensuring the use of original spare parts.**

Jacuzzi®

Official yacht partner

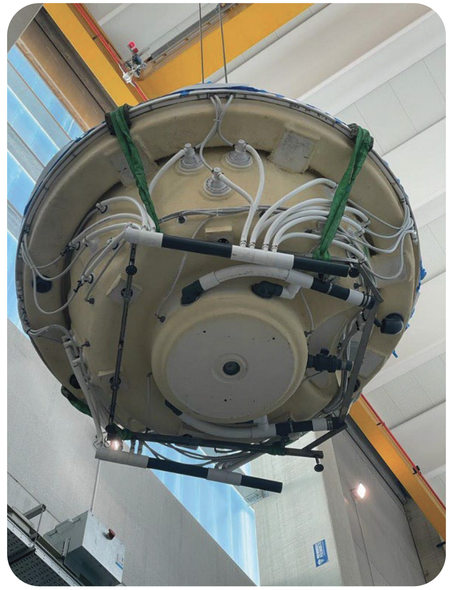

09. Hot Tub customization

centroitalia Yachting

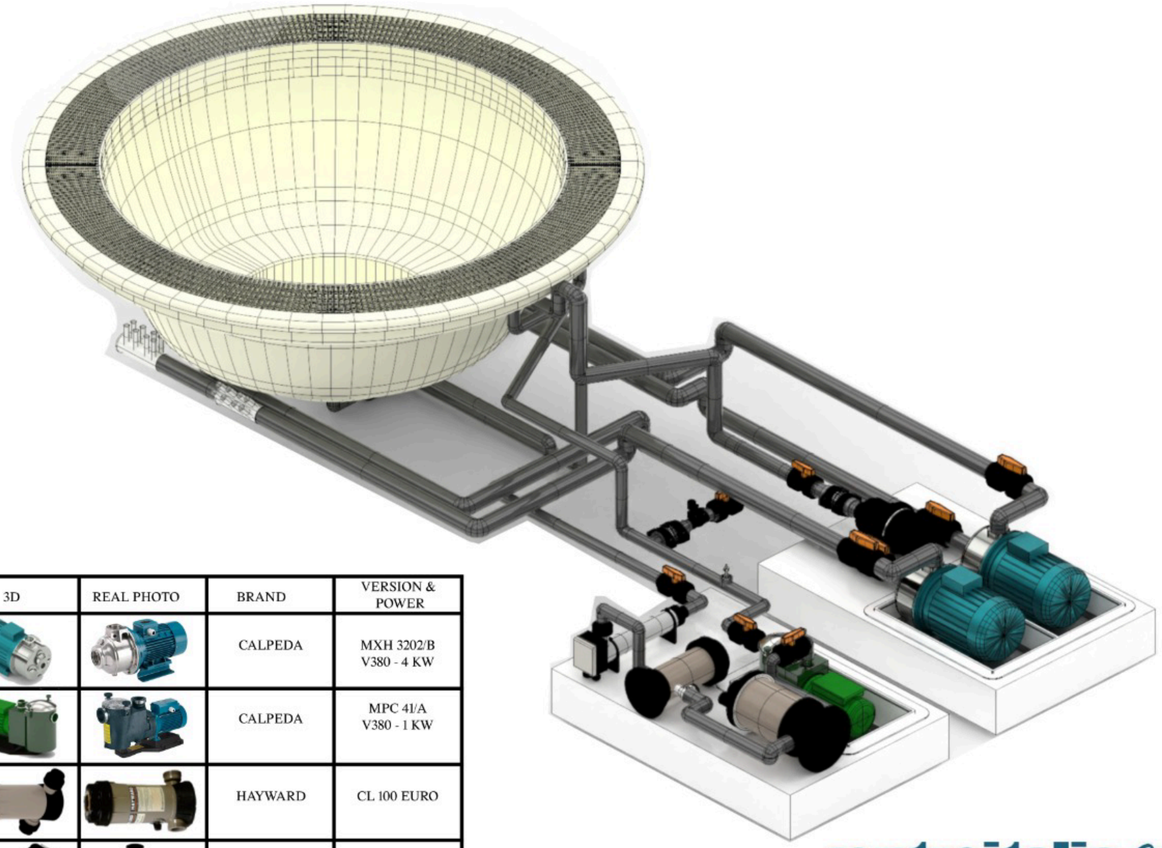

COMPONENTS	3D	REAL PHOTO	BRAND	VERSION & POWER
HYDROMASSAGE ELECTRIC PUMP			CALPEDA	MXH 3202/B V380 - 4 KW
FILTRATION ELECTRIC PUMP			CALPEDA	MPC 41/A V380 - 1 KW
CHEMICAL DISPENSER	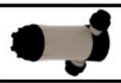		HAYWARD	CL 100 EURO
HEATER	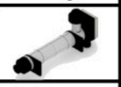		PAHLEN	ZVEXI033 12KW
FILTER			HAYWARD	C 250 EURO
BLOWER			METALAST	1.5 CV V220 - 1 KW

centroitalia Yachting

CLIENT :	PROJECT :
VIEW :	DATE :
TECHNICIAN :	

10. Sauna, Hammam and Gym

centroitalia Yachting

Turkish bath is typically constructed within a **steel or aluminum cabin** on the vessel, with **internal insulation using EPS and XPS**, and finished with Bisazza **mosaic tiles**. The walls and ceiling are **fire-resistant**, classified as **class A1**, and the door is fire-proof, classified as **class A60**.

Saunas are **custom-built** and crafted from various types of wood, including Nordic Birch available in white, golden, and red varieties Poplar, Cedar, Pine.
There are different types of saunas available:

- **Finnish Saunas**: Equipped with a stove, maintaining a temperature of 90°C with dry air.
- **Infrared Saunas**: Utilize UV lamps for therapeutic purposes, with a temperature of 50°C and dry air.
- **Sanarium Saunas**: Combine a stove and a steam generator, offering a temperature of 50°C and 50% humidity.
- **DUAL Saunas**: Feature both Finnish and Sanarium functions in the same cabin.

The walls and ceiling are **fire-resistant**, classified as **class A1**, and the door is fireproof, classified as **class A60.**

For fitness equipment, **Technogym machines are provided**, and the entire product line can be selected in consultation with the project management team.

11. Plans

centroitalia Yachting

Basic

- Design
- Material supply
- Telephone Assistance

Advanced

- Design
- Material supply
- One Technician for 40 hours

Prime

- Design
- Material supply
- On-site installation
- Our skilled and experienced team

12. Working method

centroitalia Yachting

Design

- Collection and analysis of client requests
- Presentation of applicable products and solutions
- Preliminary project and preparation of the quota-tion

Production

- Drafting of the executive project
- Opening of the construction site
- Taking charge of OSP (Operational Safety Plan) and SCP (Safety and Coordination Plan)
- Construction of the facility
- Testing activities

Assistance and maintenance

- Management and check-up of the work
- Repairs with original spare parts
- Restoration and updating activities

13. Applied technologies

centroitalia Yachting

Design

- We use AutoCAD software to provide 2D schemes for the electric and hydraulic parts.
- 3D models for studying and presenting the project in a way to create a space and make sure all systems fit into that space.
- 2D drawings for executive drawings with accurate measurements.

14. Remote control Software

The new Centro Italia Yachting Software, powered by its cutting-edge **Software Program**, has transformed the way pools and wellness spaces are managed aboard yachts and ships.

This state-of-the-art system enables **remote control and supervision** from anywhere in the world, integrating **advanced technologies, artificial intelligence and Iot**.

Operators can monitor and adjust — **in real time** — all essential parameters related to the management and fault control systems of pools and wellness areas. The system allows full **remote control of lighting, whirlpools, waterfalls, filtration**, and all other pool accessories, as well as **sauna and Turkish bath technologies** developed by Centro Italia.

In the event of a malfunction, the system can **remotely identify the faulty component and automatically initiate replacement delivery** to the yacht's location.

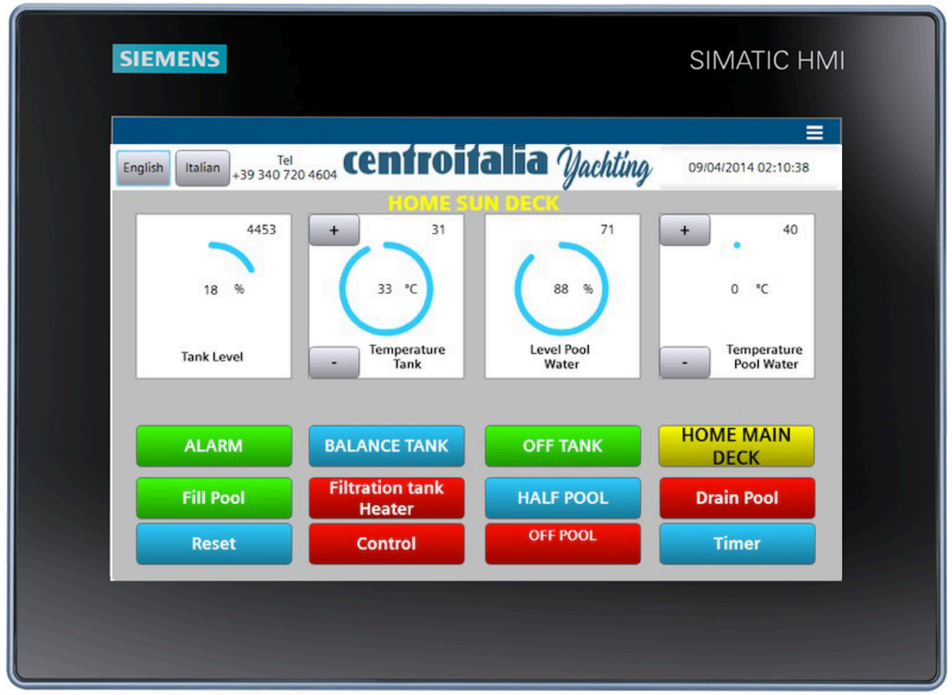

15. Water cycle

centroitalia Yachting

A. One Pool Without Tank (Pool with balance tank)

The system includes a fixed sensor that continuously measures the pool water level. When it drops below the preset threshold, the system automatically draws water from a compensation tank to replenish the pool and maintain the desired water level.

A water channel is connected to the balance tank, designed to efficiently capture and return any water that leaves the pool, ensuring sustainable water management and minimizing waste.

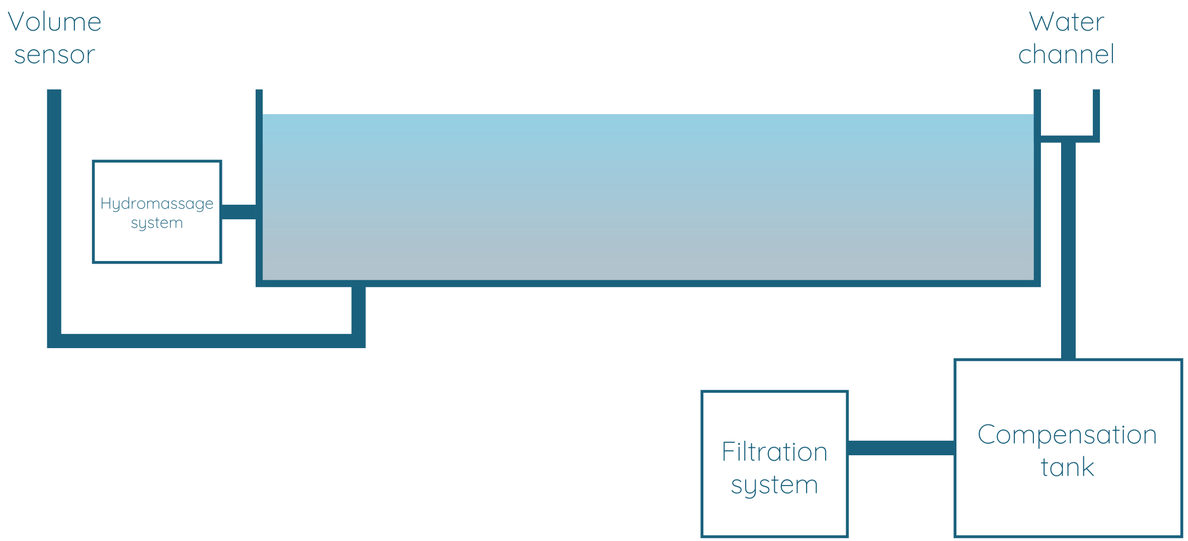

centroitalia Yachting

B. One Pool With Tank

Equipping the yacht with an onboard tank is recommended, as it keeps the water heated and filtered, ready for use at any time.

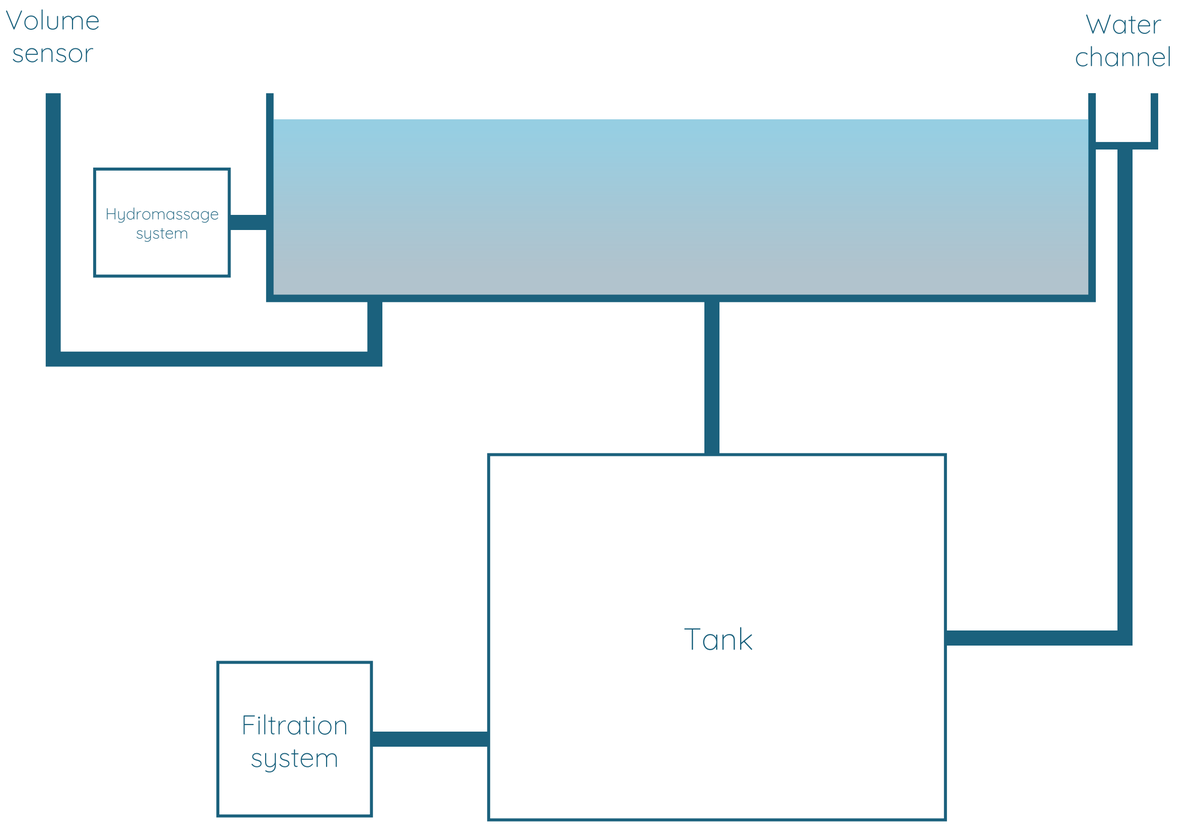

C. Two Pools With Tank

When two pools are present, having a tank to store pre-heated and filtered water is recommended, as it helps reduce waiting times to a minimum.

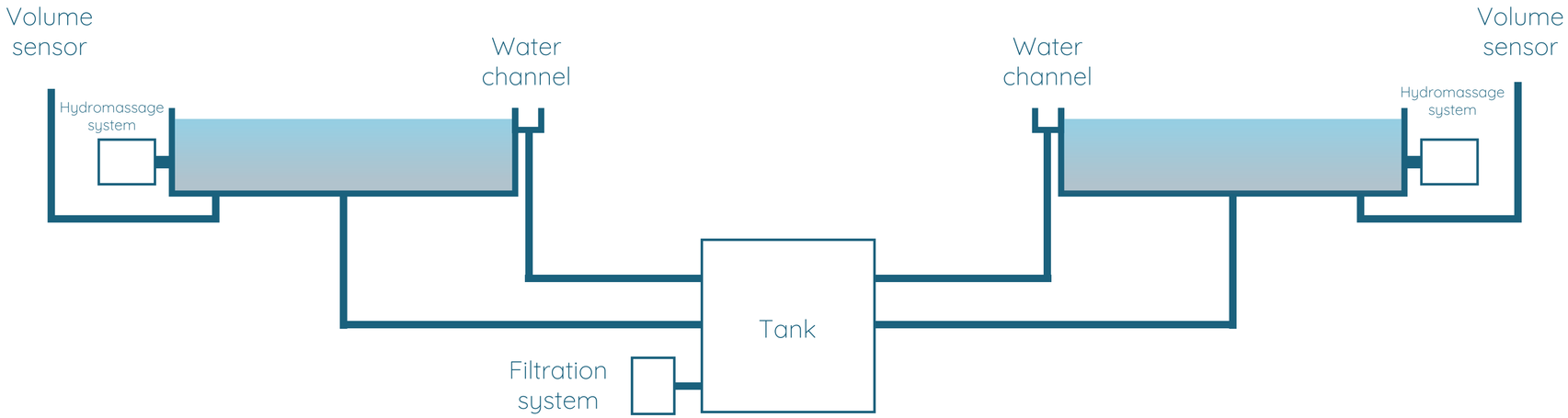

centroitalia Yachting

D. Two Pools, Two Types Of Water With Tank

This filter can be divided into two parts, one for fresh water and another for salt water.
In this case we set a filtration tank for each part of the tank.

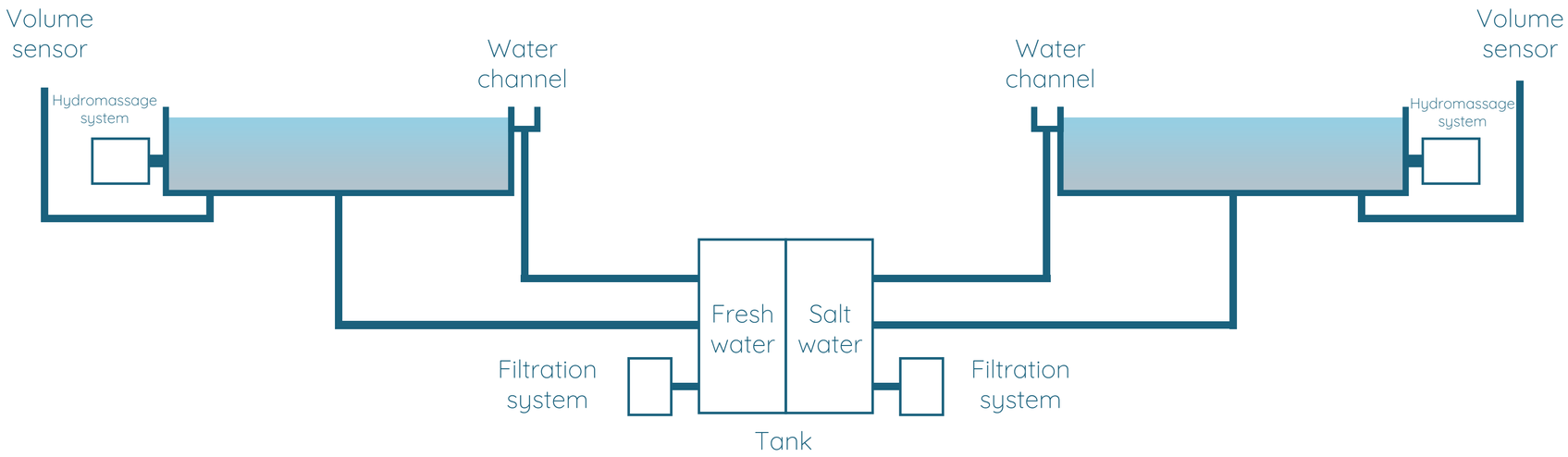

19. Filtration system

centroitalia Yachting

STANDARD FILTRATION

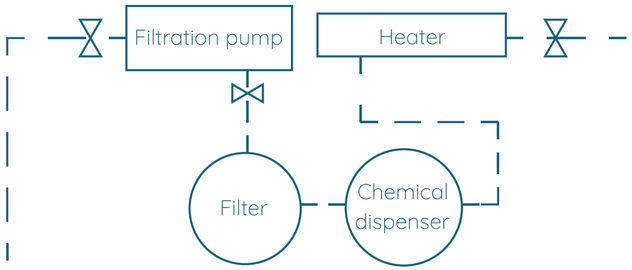

Water
Filtration pump
Filter
Chemical dispenser
Heater

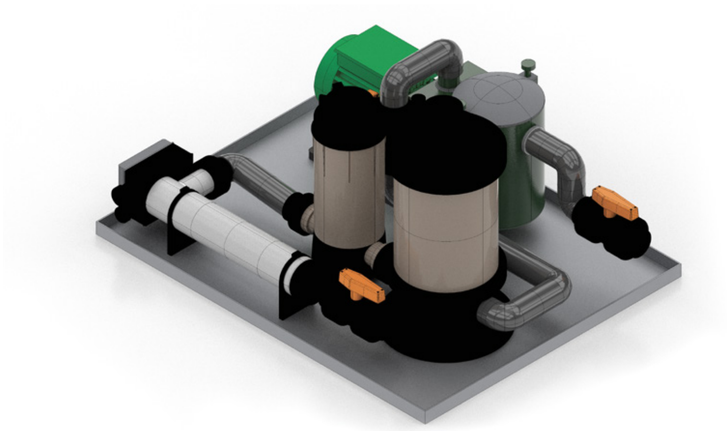

FILTRATION WITH UV DISINFECTION

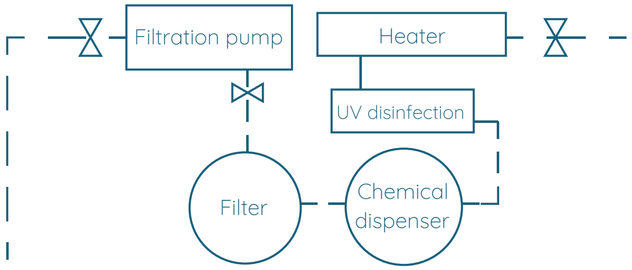

Water
Filtration pump
Filter
Chemical dispenser
UV disinfection
Heater

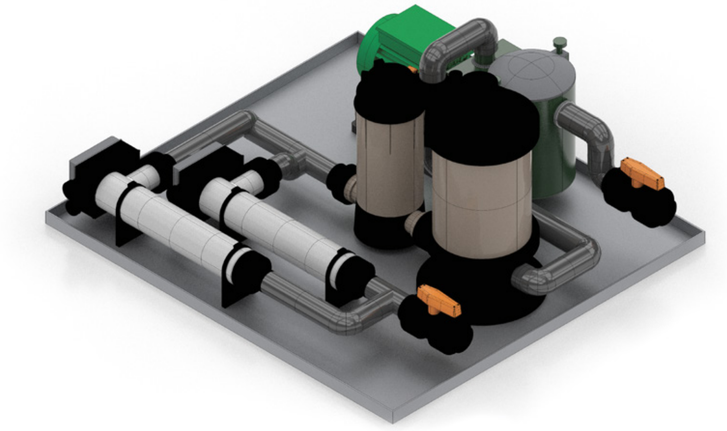

20. Hydromassage & Waterfall systems

Counter-current swimming system

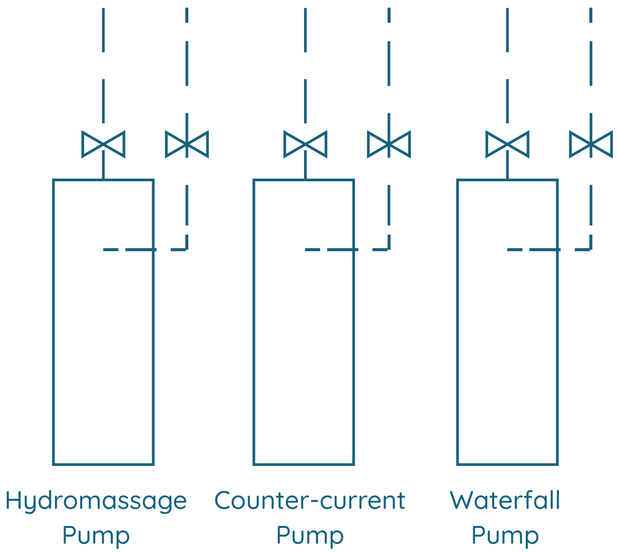

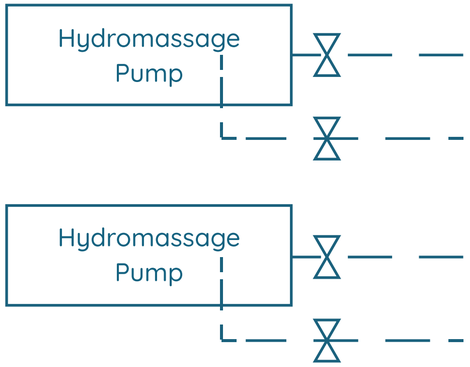

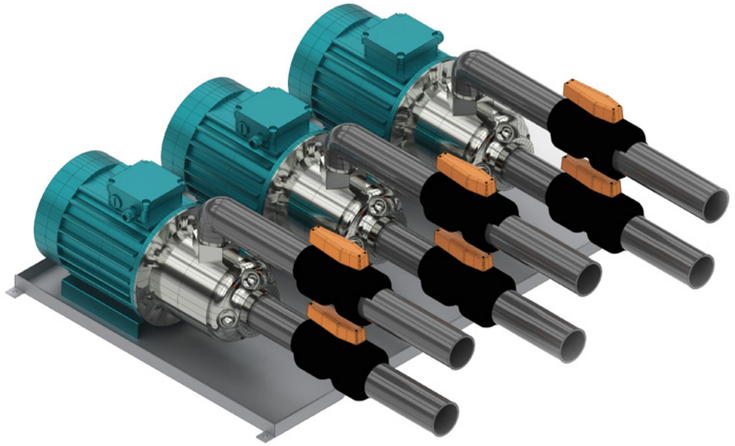

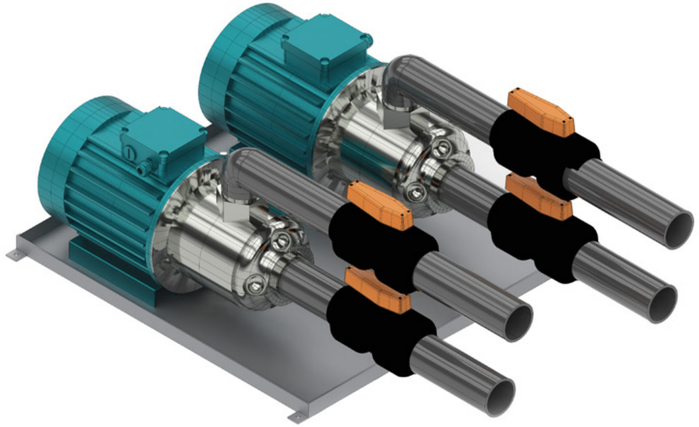

21. Heating system

centroitalia Yachting

- Typically, we employ an 18 kW heater that can raise the water temperature by around 2°C per hour;
- Having a tank on board to keep the water heated and filtered, ready for immediate use, would be preferable;
- In the absence of a tank, if faster water heating is desired by the owner, it is possible to use two or three heaters in parallel or, alternatively, dedicated heat pumps.

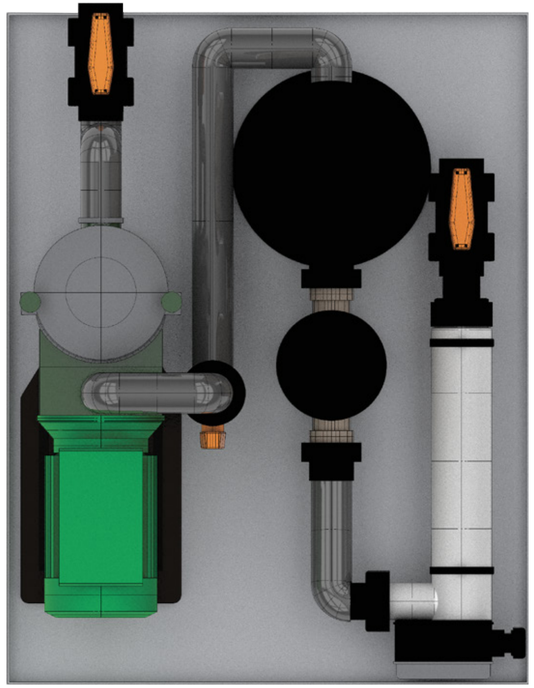

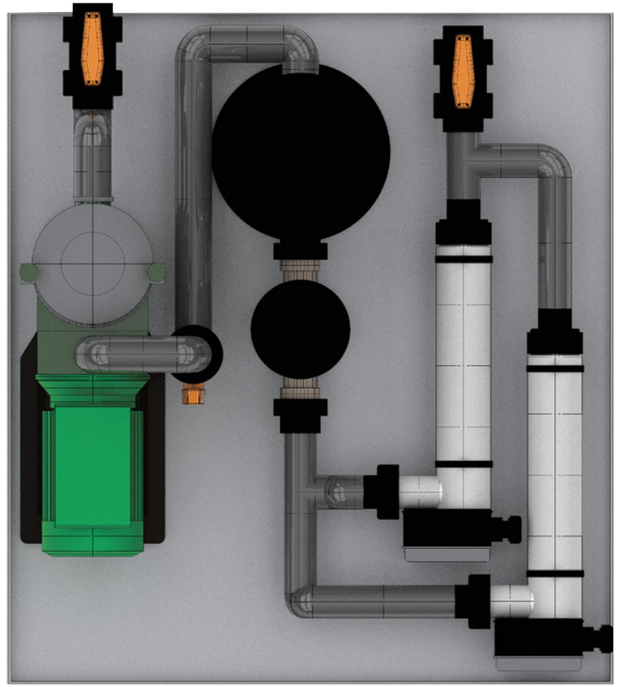

22. Lighting system

centroitalia Yachting

We use:

- Stainless steel white spotlights;
- Stainless steel RGB spotlights;
- Led strips.

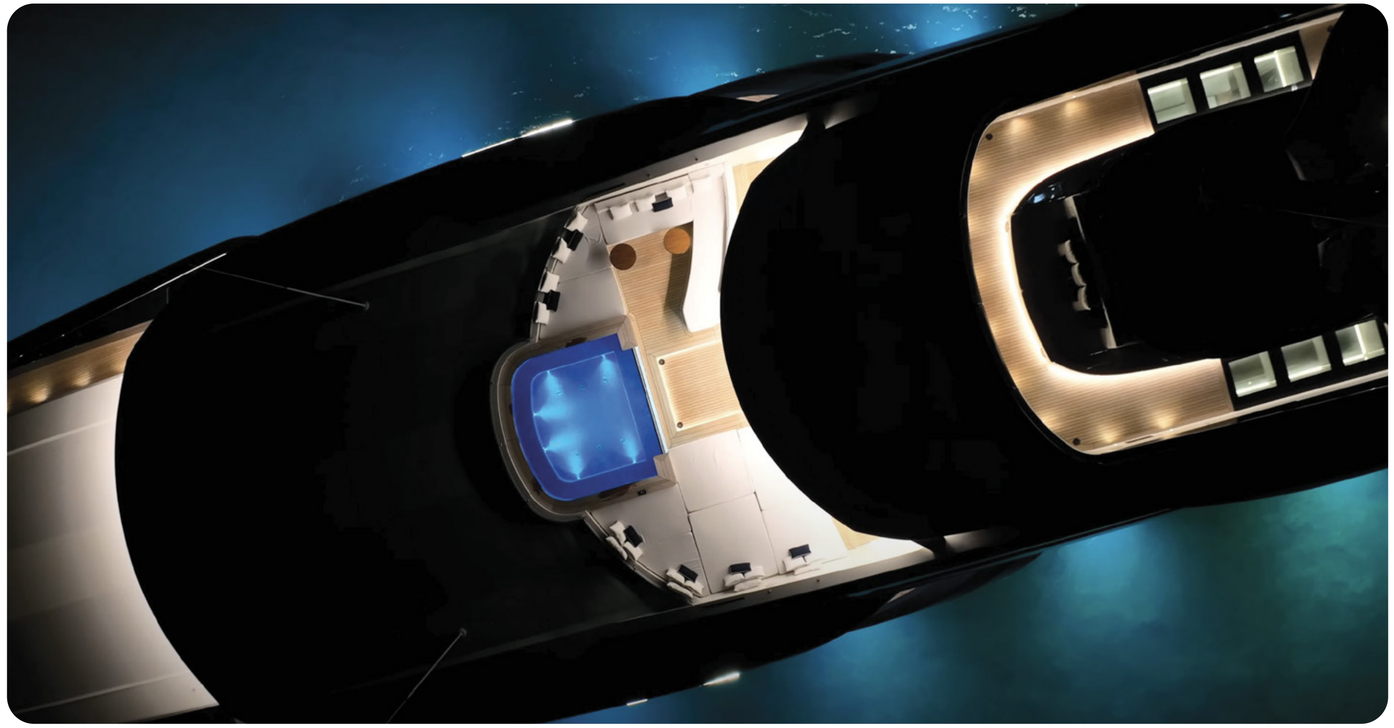

23. Hydraulic lift system

centroitalia Yachting

The hydraulic lift is a system that **raises and lowers the bottom of a pool**. The technology involves a stainless steel scissor piston that elevates and lowers a steel base, which is covered with the same material as the yacht's platform. The movable floor of the pool enables the following operations:

- Transforming the pool area into a relaxation or lounge area;
- Closing the pool for child safety;
- Adjusting pool depth for children's use.

24. Portfolio: Dragon 80

centroitalia Yachting

- Shipyard: Columbus Yachts
- Features: Marine aluminum pool - customizable interior with EPS and XPS seating and rounded edges - 1 x 1 Bisazza mosaic - glass walls and bottom - filtration system, hydromassage, air plates, waterfall - the pool has a water storage tank, and LED spotlight lighting.

25. Portfolio: Elements 80

centroitalia Yachting

- Shipyard: Yachtley
- Features: Fiberglass pool with 2 glass walls - powerful system with 50 hydromassage jets - LED RGB spotlight lighting- seawater.

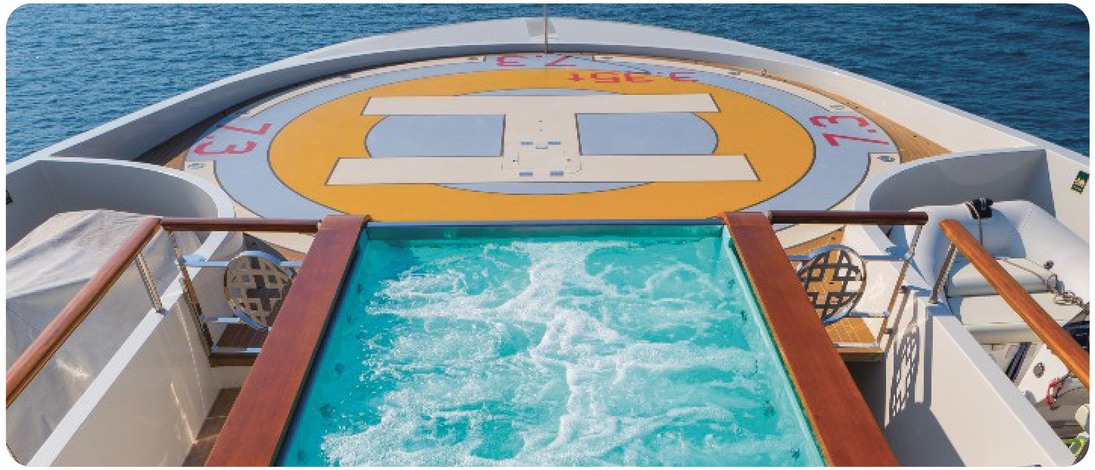

26. Portfolio: ISA 45 GT

centroitalia Yachting

- Shipyard: ISA Yachts
- Features: Custom marine aluminum hot tub - glass walls and bottom - overflow channel with integrated compensation tank, hydromassage filtration system, and LED RGB strip lighting.

27. Portfolio: Resilience 65

centroitalia Yachting

- Shipyard: ISA Yachts
- Features: Marine aluminum pool - filtration system, hydromassage system, water storage tank - waterfall system - glass wall - professional counter - current swimming system - LED RGB spotlight lighting.

28. Portfolio: Panam 40

centroitalia Yachting

- Shipyard: Baglietto
- Features: Fiberglass pool - transparent pool perimeter with a single methacrylate element - professional counter-current swimming system.

Contacts

Thank you

centroitalia Yachting®

800 931 931
+39 327 612 0605
info@centroitaliayachting.com
www.centroitaliayachting.com

Via Cassia 1864
00123 Rome, Italy